MEE3502:

Design Process Planning and Management

FINAL REPORT

Submitted to: Prof. Anandavel K

GROUP 4

Paras Tiwari (20BME0497)

Nagendar Gulia (20BMA0028)

Sujal Srivastava (20BME0699)

Table of content

Introduction	1
Table of content	2
Abstract	3
Design	4
Positioning	6
Calculation and Theoretical Simulation	7
Material	11
Literature review	12
Literature references	14

Tire Load Monitoring System

Abstract

The most common problem nowadays is with the overloading of heavy vehicles because of which tires of the vehicle is unable to handle the excess load and hence, the vehicles collapse and accidents occur. To overcome this problem, an instrument is being designed to measure the tire load that is being impacted by the loading of the vehicle. This will resolve the problem of overloading by indicating the saturation point of the tire capacity that it can withstand.

It is basically an instrument comprising of two concentric cylinders overlapped one over the other. The outer cylindrical shell behaves as a passage for the inner one in order to form a sliding pair. The material used is the polytetrafluoroethylene (PTFE) and constantan alloy which has almost all the required properties for the making of this instrument. PTFE is a synthetic fluoropolymer of tetrafluoroethylene, and constantan alloy comprises of 55% of copper and 45% of nickel. The inner cylindrical shell from the top and there is a thin conducting rod in the lower part, which acts as a conductor in the whole assembly. A voltage difference is being maintained between the ends and current is sent to the microprocessor for further calculations and processing.

It is based on the working principle of change in electrical resistance with change in length. As the sliding pair performs to-and-fro motion, the change in length of the inner cylinder will provide the electrical resistance through which we will be able to calculate the voltage difference between the two ends of the instrument. Tire profile during compression and expansion, tire dynamics, damping forces, spring stiffness, friction, air hinderance; all are taken into account at the time of calculation and relatable formulas are being used for at most precision and accuracy.

DESIGN

- The design comprises of two parts.
- The upper part comprises of two cylindrical shells where the inner one is a conductor and is exposed on the top.
- The lower part has a thin conducting rod inside the shell which exposed at the lower end.
- When these two parts are connected, they form a sliding pair.
- The conductor material in the upper part is constantly in contact at point A with the lower part conductor material making it a close circuit.
- A voltage difference is provided between the end of the design.
- The current is sent to the microprocessor for further processing.

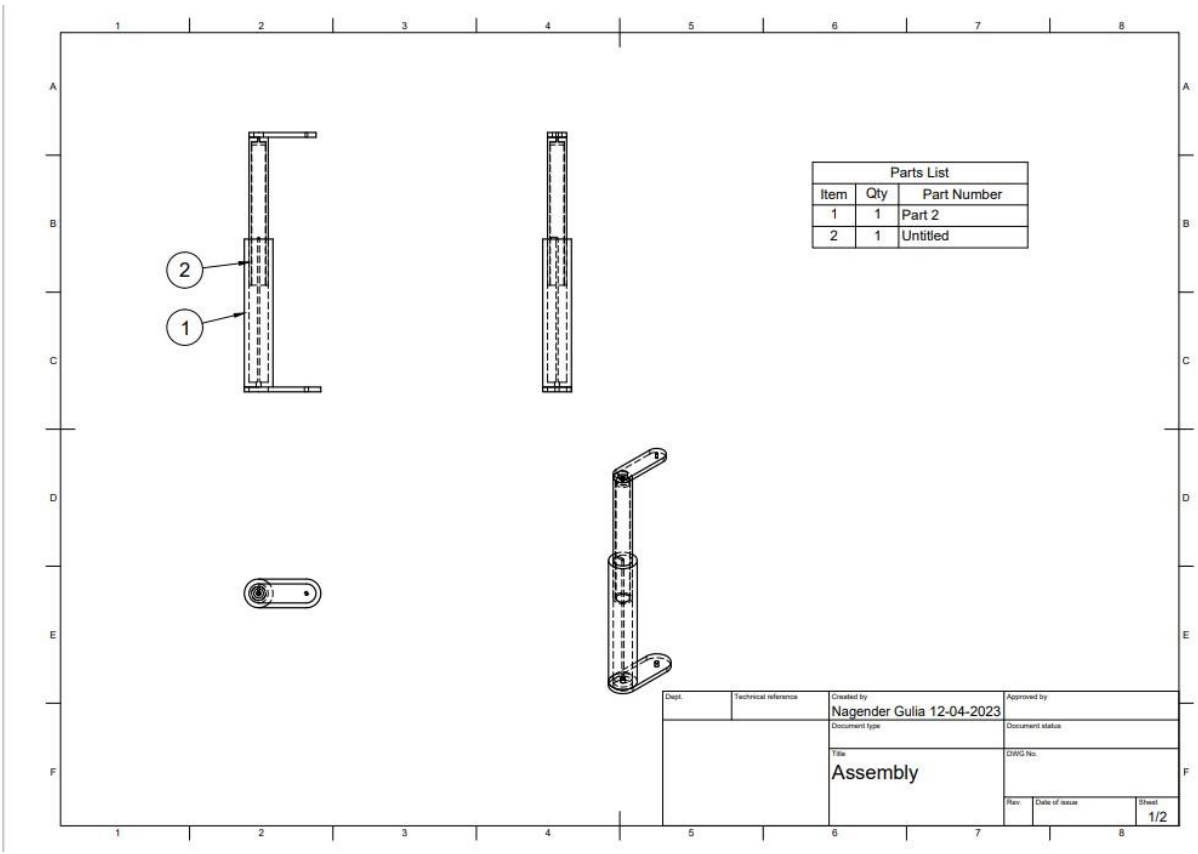

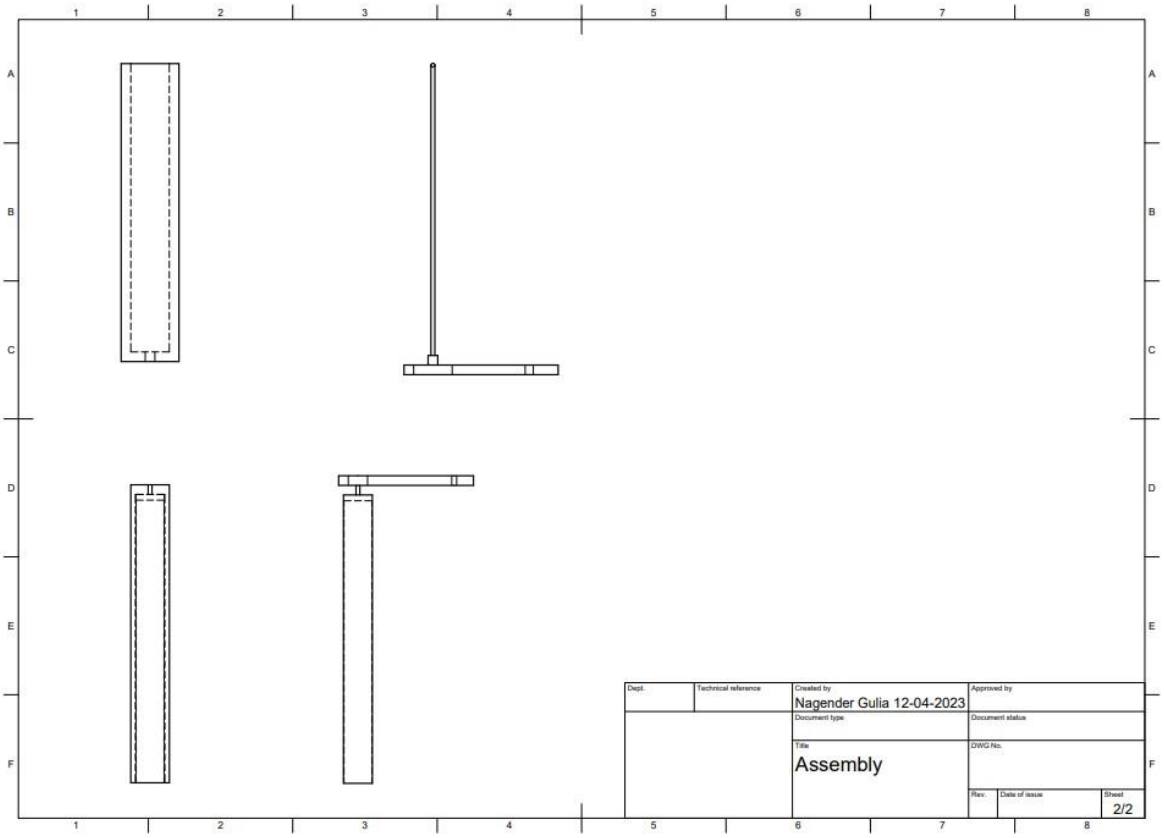
Dept.
Technical reference
Created by
Nagender Gulia 12-04-2023
Approved by
Document type
Document status
Title
Assembly
DWG No.
Rev.
Date of issue
Sheet
2/2

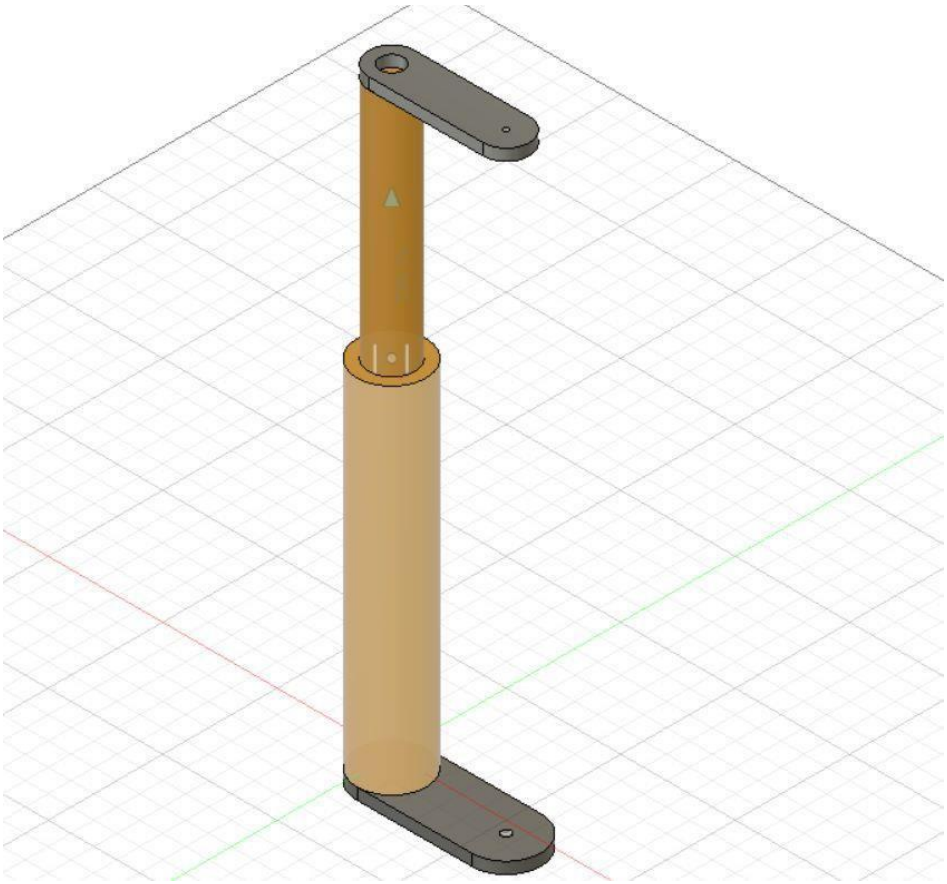

POSITION

- The prototype shown here works on the simple principal of change in electric resistance with change in length.
- It is fitted with the suspension of tire with each end fitted to one end of the coil spring and the exposed conductor part on the ends is provided with a voltage difference.
-
- It is fitted in such a way that the length varies equally to as that of the spring.

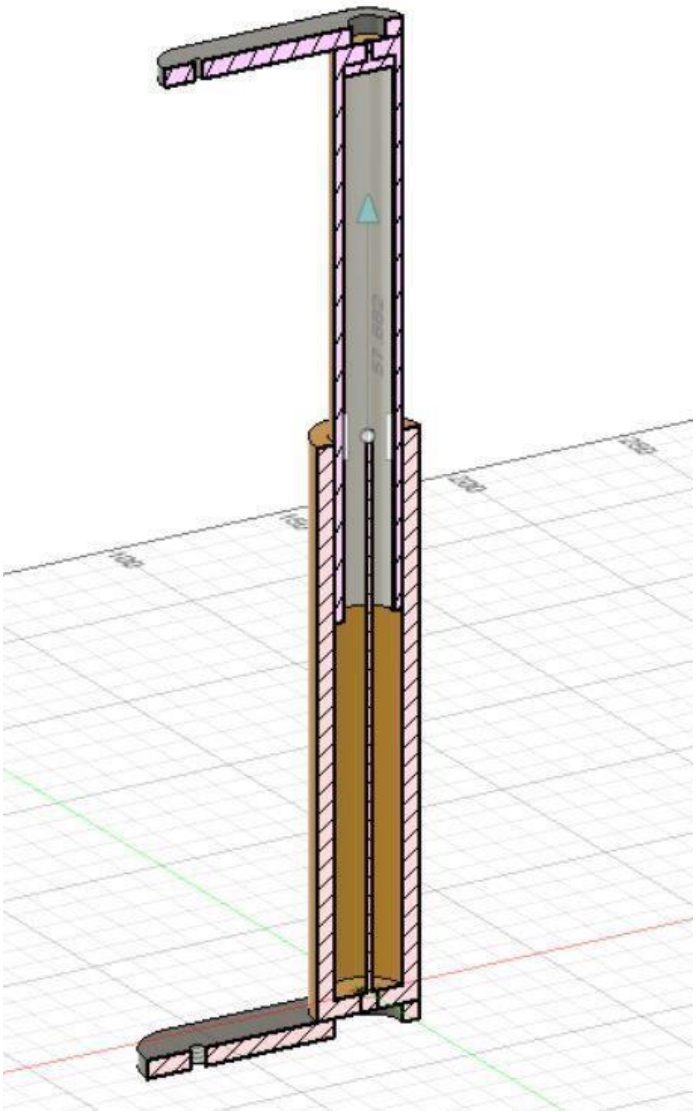

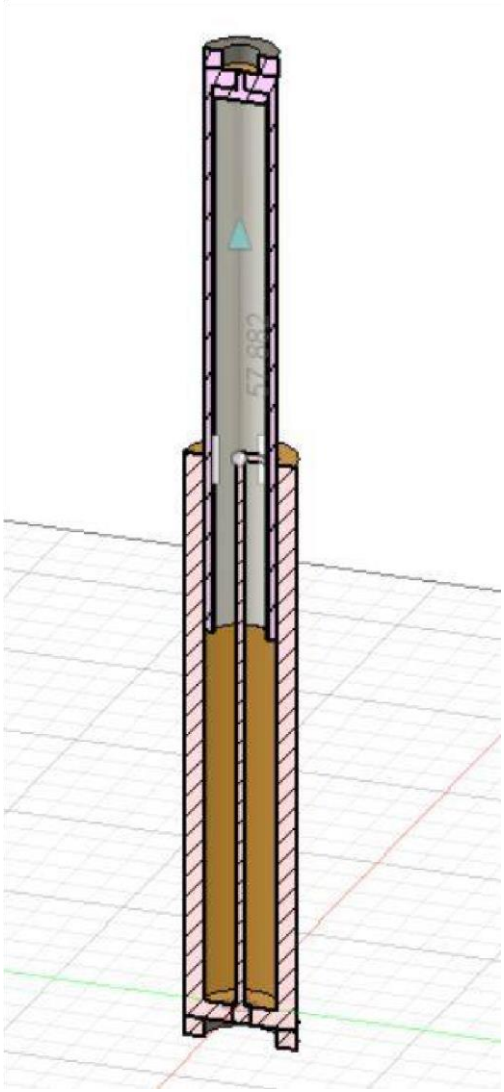

CALCULATIONS

- For the spring mass, the force can be given by :

$$F(t) = K_s x + C_{sn} \frac{dx}{dt}$$

- When K_s is the spring stiffness constant.
- C_{sn} is the shocker damping constant.
- C_{sn} is the shocker damping constant.
- $x = Z_z - Z_1$ length of compression of spring.
  (x here is the input by the sensor)
- Z_2 = distance travelled by car.
- Z_1 = distance travelled by axle.

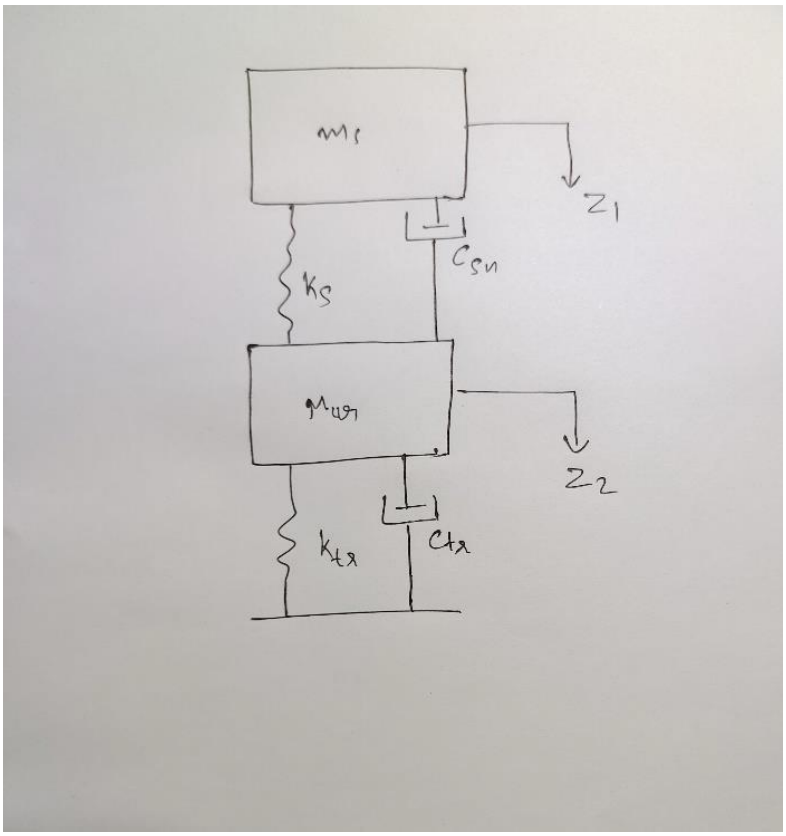

Since the major deflection is in the coil spring the force acting on the string mass gives almost a good idea of the tyre load.

But to improve the accuracy of the result we must incorporate the tire dynamics.

$$F(t) = M_{ur}Z_2 + C_{sn}(dx/dt) + k_s x + C_{td}(Z_2/dt) + K_{tr}Z_2$$

Now the real challenge is calculating the Z2.

This can be calculated using the pressure monitor system, using the existing system change in pressure can be calculated by

$$PU = \square\square\square$$

This is the ideal gas equation. Although it is different than the real gas equation it will improve the accuracy overall. Using the real gas equation will just increase cost and complexity.

$$\Delta V = \square\square\square\Delta\square$$

We can calculate change in volume from the formula above.

Now, when the tyre is compressed the tyre profile changes from :

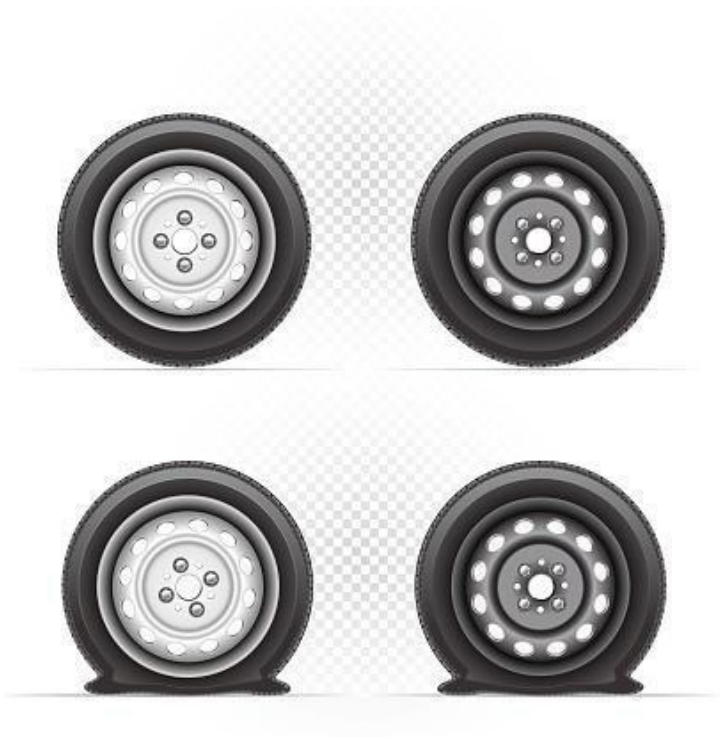

Change in volume is of the shape of sphere cut out. To approximate this change in volume we first have to measure the radius of outer profile. volume of the part equal to = $\mathbf{V = 13\pi h2(3R-h)}$ h
= Z2

Solving the above equations, we get Z_2.

Theoretical Simulation (All the values here are assumed)

- The spring constant of a car can vary widely depending on various factors, such as the type of suspension system, the weight of the car, and the intended use of the vehicle.
- For example, the spring constant for a vehicle may be around 15-20 N/mm.
- Now, considering a vehicle with spring constant of 17 N/mm.
- The damping coefficient varies from 100Ns/m to 1000Ns/m from car to car. Lets consider 400Ns/m for our case as the vehicle is a family sedan which need not to be much stiff.
- Now the stiffness constant for tire varies from 100N/mm to 300N/mm so let us consider at proper tire pressure the stiffness is 150N/m+
- Noe lets assume the legth of coil spring to be 300mm.
- The tire is assumed with a radius of 8 inches = 203mm.
- Unsprung mass on one tire is assumed 25kg

Case 1 (When the car is at rest)

- At rest the coil spring is compressed to about 12% of its length.
- So x = 12*300/100 = 36mm
- Also there is a 1 mm compression assumed in the tire.
- So z2 = 1mm
- Since the car suspension is at rest the velocity and acceleration component remains 0.

- F = k(s)*x + k(tr)*z2 = 17*36 + 150*1 = 762 N
- SO the weight of the vehicle acting on one tyre is 76.2 kg.

Case 2 (When the car hits a bump)

- The coil spring is compressed to 20% of its length in 2 second
- And the pressure shows a deflection from 33 psi to 35 psi
- Temprature of the tire is 35C
- dV = n*R*T/dP
- Here, n = 3.27
- R = 0.8314
- dP = 2psi = 0.0138 N/mm2
- Therefore dV = 30410 mm^3
- Putting the value in V = pi*h^2(3R-h)/3
- We get, h = 4mm = z2
- Now when we use the equation
- $F(t) = m_{ur}\ddot{Z}_z + C_s(x') + K_s(x) + C_t + Z_z$
- $M_{ur} = 25kg$
- $x = \left(\frac{20}{100}\right) * 300 = 60N - m$
- $\dot{x} = \frac{60}{2} = 30\frac{mm}{s}$
- $Z_z = 4mm$
- $\dot{Z}_z = \frac{4}{2} = 2\frac{mm}{s}$
- $\ddot{Z}_z = 1\frac{mm}{s^2}$
- $F(t) = 25kg * 1 + 400 * 30 + 17 * 60 + 20 * 2 + 150 * 4 = 13685\ N$

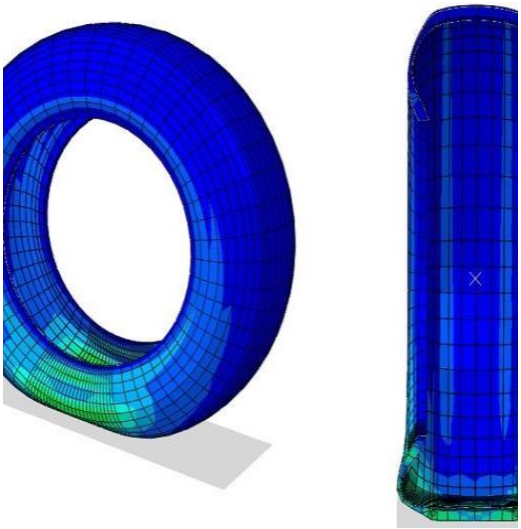

- Load acting on the time is 13685N due to the bump.

MATERIAL

Constantan alloy.

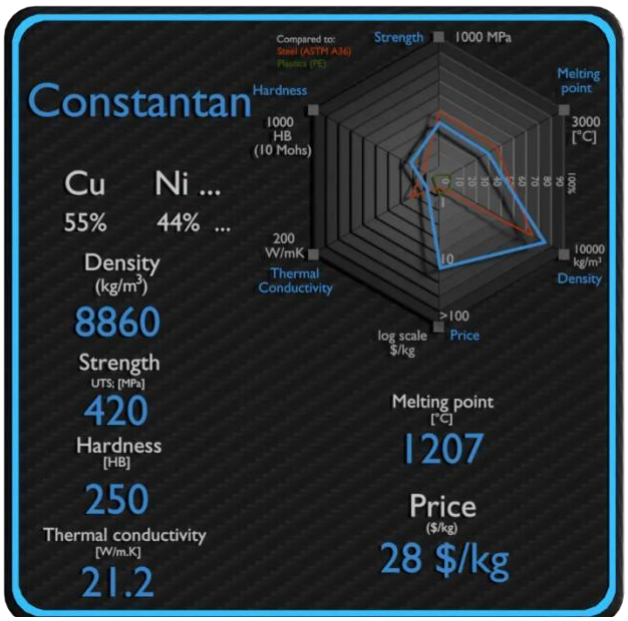

- Of all modern strain gauge alloys, constantan is the oldest, and still the most widely used. This situation reflects the fact that constantan has the best overall combination of properties needed for many strain gauge applications. This alloy has, for example, an adequately high strain sensitivity, or gauge factor, which is relatively insensitive to strain level and temperature. Its resistivity (4.9 x 10−7 Ω-m) is high enough to achieve suitable resistance values in even very small grids, and its temperature coefficient of resistance is low.

- In addition, constantan is characterized by good fatigue life and relatively high elongation capability. Constantan is also used for electrical resistance heating and thermocouples.

- Its resistivity (4.9 x 10−7 Ω-m) is high enough to achieve suitable resistance values in even very small grids, and its temperature coefficient of resistance is low.

- Polytetrafluoroethylene (PTFE) is a synthetic fluoropolymer of tetrafluoroethylene that has numerous applications. It is one of the best known and widely applied PFAS. The commonly known brand name of PTFE-based composition is Teflon by Chemours, a spin-off from DuPont, which originally discovered the compound in 1938.

- The deforming temperature of PTFE is 120 degree Celsius which is well above the highest temperature that can be developed even in extreme weather conditions

- Polytetrafluoroethylene is a fluorocarbon solid, as it is a high-molecularweight polymer consisting wholly of carbon and fluorine. PTFE is hydrophobic: neither water nor water-containing substances wet PTFE, as fluorocarbons exhibit only small London dispersion forces due to the low electric polarizability of fluorine. PTFE has one of the lowest coefficients of friction of any solid.

Property (Unit)	Value
Density (g/cm^3)	2.3–2.45
Water absorption (%)	>0.01
Tensile strength (kg/cm^2)	140–350
Flexural strength (kg/cm^2)	16.4
Rockwell hardness	D55
Izod impact strength (kg cm/ cm with notch)	2.5–2.7
Friction coefficients	0.10–0.04
Coefficient of linear thermal expansion (x 10^{-5}/°C)	7.0–10.0
Thermal conductivity (kcal/m. Hr. °C)	6.0
Heat distortion temperature (°C)	120
Heat resistance (°C)	–70–260
Dielectric breakdown strengths (kV/mm)	19
Coefficient of volume resistance (Ohm-cm)	10^{18}

Literature Review:

The most common problem nowadays is with the overloading of heavy vehicles because of which tires of the vehicle is unable to handle the excess load and

hence, the vehicles collapse and accidents occur. To overcome this problem, an instrument is being designed to measure the tire load that is being impacted by the loading of the vehicle. This will resolve the problem of overloading by indicating the saturation point of the tire capacity that it can withstand.

It Is basically an instrument comprising of two concentric cylinders overlapped one over the other. The outer cylindrical shell behaves as a passage for the inner one in order to form a sliding pair. The material used is the polytetrafluoroethyl- -ene (PTFE) and constantan alloy which has almost all the required properties for the making of this instrument.

PTFE is a synthetic fluoropolymer of tetrafluoroethylene, and constantan alloy comprises of 55% of copper and 45% of nickel. The inner cylindrical shell from the top and there is a thin conducting rod in the lower part, which acts as a conductor in the whole assembly.

A voltage difference Is being maintained between the ends and current is sent to the microprocessor for further calculations and processing.It is based on the working principle of change in electrical resistance with change in length. As the sliding pair performs to-and-fro motion, the change in length of the inner cylinder will provide the electrical resistance through which we will be able to calculate the voltage difference between the two ends of the instrument.

Tire profile during compression and expansion, tire dynamics, damping forces, spring stiffness, friction, air hinderance; all are taken into account at the time of calculation and relatable formulas are being used for at most precision and accuracy.

Placement of the instrument is done with the suspension of the tire. It is fitted between the coil of the coil spring suspension.

Literature References:

1. **A Comprehensive Study on Technologies of Tyre Monitoring Systems and Possible Energy Solutions** By: **Ali E. Kubba and Kyle Jiang**
Year of publication: **2014**

https://www.mdpi.com/73922

2. **Monitoring system design for estimating the lateral tyre force**

By: **K. Huh, J. Kim and K. Yi** Year

of publication: **2003**

https://journals.sagepub.com/doi/abs/10.1243/09544070360613219?journalCode=pidb

3. **Tire pressure remote monitoring system reducing the rubber waste**
By: **Szczucka Lasota, T. Wegrzyn, B. Lazarz and J.A. Kaminska**
Year of publication: **2021**

https://www.sciencedirect.com/science/article/pii/S1361920921002856

4. **Research on load prediction model construction method of the tire condition monitoring system**

By: **Qiang Zhao, Hongxun Fu, Yu Zhang, Xianyue Gang and Di tan** Year

of publication: **2021**

https://link.springer.com/article/10.1007/s40430-021-03272-2

5. **RF modelling and characterization of a tyre pressure monitoring system**

By: **M. Brzeska and G.A. Chakam** Year

of publication: **2007**

https://digital-library.theiet.org/content/conferences/10.1049/ic.2007.0879

6. **Adaptive Unified Monitoring System Design for Tire-Road Information**

By: **Shuo Cheng, Ming-ming Mei, Xu Ran, Liang Li and Lin Zhao**

Year of publication: **2019**
https://asmedigitalcollection.asme.org/dynamicsystems/article/141/7/071006/726527/Adaptive-Unified-Monitoring-System-Design-for-Tire

7. **On board road condition monitoring system using slip-based tyre-road friction estimation and wheel speed signal analysis**

By: **K Li, J. A. Misener and K. Hedrick** Year

of publication: **2007**

https://journals.sagepub.com/doi/abs/10.1243/1464419JMBD60?journalCode=pika

8. Tire Pressure Monitoring System Using SoC and Low Power Design

By: **A. Vasanthara and K. Krishnamoorthy** Year of publication:

2016

https://www.scirp.org/journal/paperinformation.aspx?paperid=71920

9. **Influence of tire pressure on fuel consumption in trucks with installed tire pressure monitoring system**

By: **Szczucka Lasota, B. Kaminska and J. Krzyzewska** Year

of publication: **2019**

https://doi.org/10.20858/sjsutst.2019.103.13.

10. **A novel sensor design for the tyre load monitoring: overall design and analysis**

By: **Amin Kamalzadeh, M. Farid Golnaraghi, Ash M. Parameswaran and Albert M. Leung**

Year of publication: **2011**

https://www.inderscienceonline.com/doi/abs/10.1504/IJVD.2011.043266